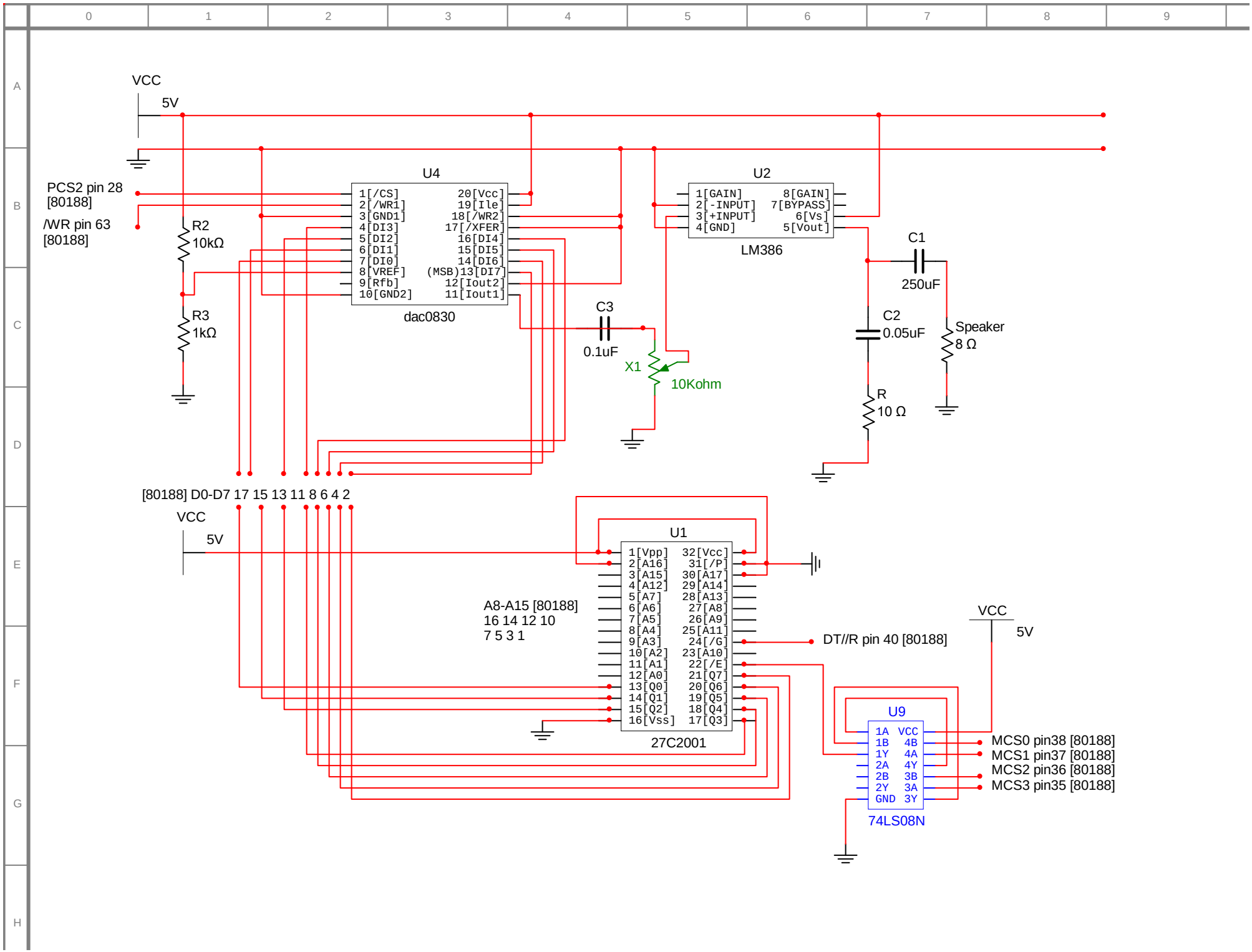
VCC
5V
PCS2 pin 28
[80188]
/WR pin 63
[80188]
R2
10kΩ
R3
1kΩ
U4
1[/CS]
2[/WR1]
3[GND1]
4[DI3]
5[DI2]
6[DI1]
7[DI0]
8[VREF]
9[Rfb]
10[GND2]
20[Vcc]
19[Ile]
18[/WR2]
17[/XFER]
16[DI4]
15[DI5]
14[DI6]
(MSB)13[DI7]
12[Iout2]
11[Iout1]
dac0830
C3
0.1uF
X1
10Kohm
U2
1[GAIN]
2[-INPUT]
3[+INPUT]
4[GND]
8[GAIN]
7[BYPASS]
6[Vs]
5[Vout]
LM386
C1
250uF
C2
0.05uF
Speaker
8 Ω
R
10 Ω
[80188] D0-D7 17 15 13 11 8 6 4 2
VCC
5V
U1
1[Vpp]
2[A16]
3[A15]
4[A12]
5[A7]
6[A6]
7[A5]
8[A4]
9[A3]
10[A2]
11[A1]
12[A0]
13[Q0]
14[Q1]
15[Q2]
16[Vss]
32[Vcc]
31[/P]
30[A17]
29[A14]
28[A13]
27[A8]
26[A9]
25[A11]
24[/G]
23[A10]
22[/E]
21[Q7]
20[Q6]
19[Q5]
18[Q4]
17[Q3]
27C2001
A8-A15 [80188]
16 14 12 10
7 5 3 1
DT//R pin 40 [80188]
VCC
5V
U9
1A
1B
1Y
2A
2B
2Y
GND
VCC
4B
4A
4Y
3B
3A
3Y
74LS08N
MCS0 pin38 [80188]
MCS1 pin37 [80188]
MCS2 pin36 [80188]
MCS3 pin35 [80188]

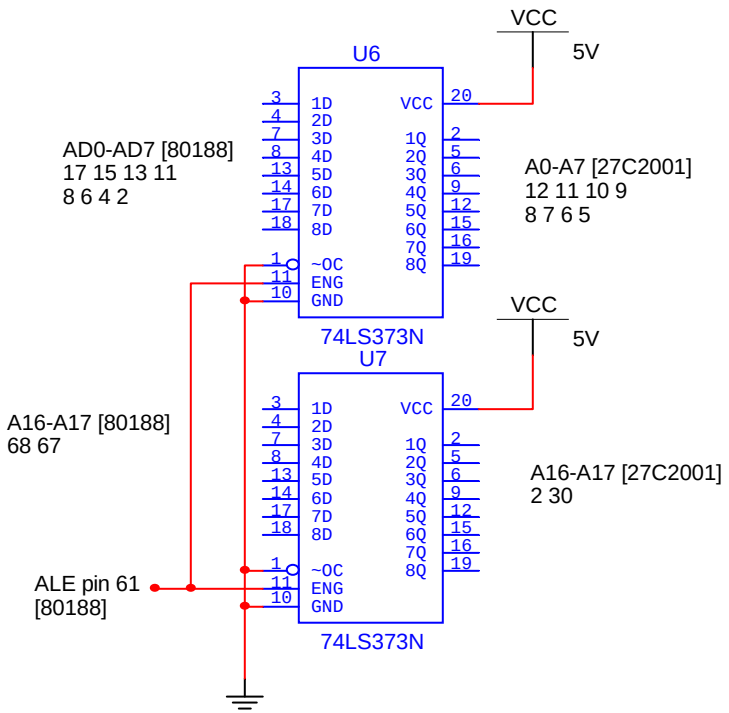
VCC
5V
U6
AD0-AD7 [80188]
17 15 13 11
8 6 4 2
3 4 7 8 13 14 17 18
1D 2D 3D 4D 5D 6D 7D 8D
VCC
20
1Q 2Q 3Q 4Q 5Q 6Q 7Q 8Q
2 5 6 9 12 15 16 19
A0-A7 [27C2001]
12 11 10 9
8 7 6 5
1 11 10
~OC ENG GND
74LS373N
VCC
5V
U7
A16-A17 [80188]
68 67
A16-A17 [27C2001]
2 30
ALE pin 61
[80188]
74LS373N