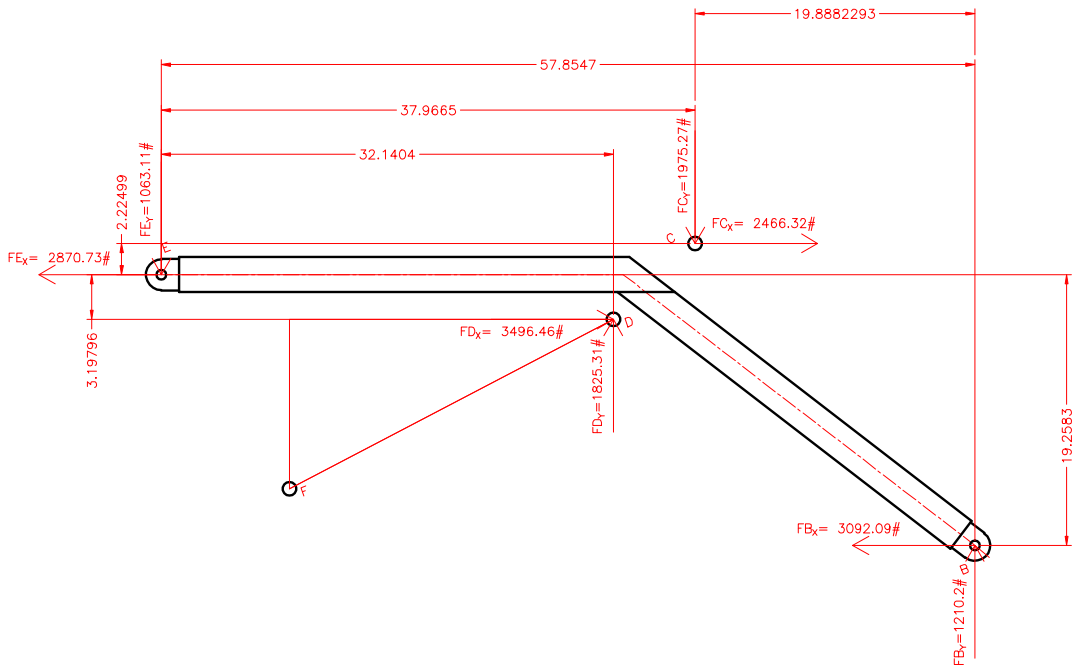

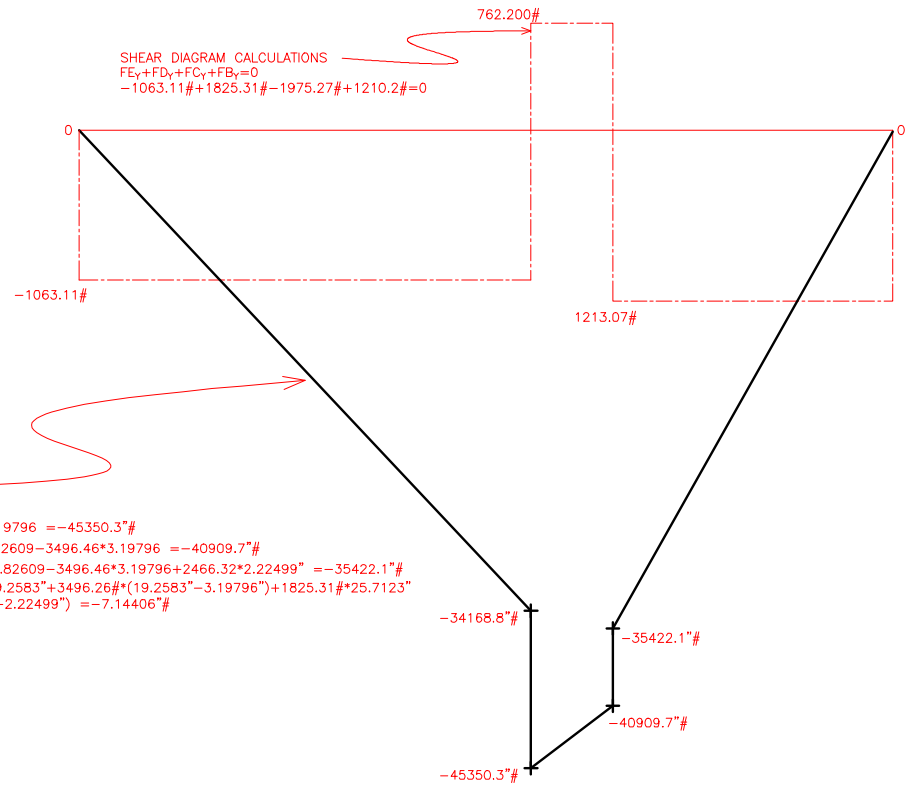

SHEAR DIAGRAM CALCULATIONS

$FE_Y+FD_Y+FC_Y+FB_Y=0$

$-1063.11\#+1825.31\#-1975.27\#+1210.2\#=0$

MOMENT CALCULATIONS

$M_{32.1404}=-1063.11\#*32.1404=-34168.8"\#$

$M_{32.1404}+=-1063.11\#*32.1404-3496.46*3.19796 \ =-45350.3"\#$

$M_{37.9665}=-1063.11\#*37.9665+1825.31\#*5.82609-3496.46*3.19796 \ =-40909.7"\#$

$M_{37.9665}+=-1063.11\#*37.9665+1825.31\#*5.82609-3496.46*3.19796+2466.32*2.22499" \ =-35422.1"\#$

$M_{57.8547}=-1063.11\#*57.8547"-2870.73\#*19.2583"+3496.26\#*(19.2583"-3.19796")+1825.31\#*25.7123"$
$-1975.27\#*19.8882"+2466.32\#*(19.2583"+2.22499") \ =-7.14406"\#$